HIGH POWER COAXIAL RF CIRCULATOR
F2510

Key Features:

- Center frequency range: 135~400MHz, up to 15% bandwidth
- DIN 7/16 connectors or type N female connectors,
- High performance, low insertion loss, high isolation, good VSWR
- High power handling capability, ≥1000Watt CW power

Electrical Specifications

Part No.	Freq Range MHz	Insertion Loss, dB	Reverse Isolation, dB	VSWR	Forward Power, Watts	Temp. Range, °C
F2510-0141-04	138~144	0.6 Max	≥ 20	≤ 1.20	≥ 1000	-20 ~ +65
F2510-0144-04	141~147	0.6 Max	≥ 20	≤ 1.20	≥ 1000	-20 ~ +65
F2510-0265-18	240-290	0.6 Max	≥ 20	≤ 1.25	≥ 1000	-20 ~ +65
F2510-0360-14	335~385	0.5 Max	≥ 20	≤ 1.20	≥ 1000	-20 ~ +65

Mechanical Structure:

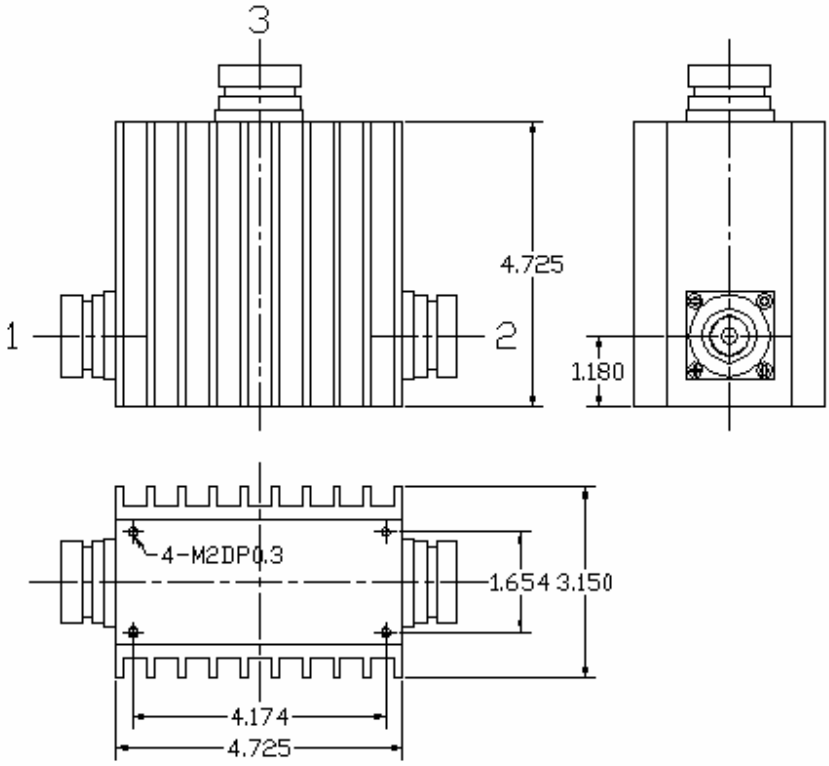

Note: All units are in inches.

Ordering Information:

F2510-XXXX-XX-CC → Connector type, NF for N female, DF for DIN 7/16 female

Bandwidth, XX%,

Frequency 0XXX MHz,

1070 Hamilton Road, Suite A, Duarte, CA 91010
Phone: (626) 305-6666, Fax: (626) 602-3101, sales@wenteq.com, www.wenteq.com